DRY Kit
SANDWICH 30 mm

PART	*COMPOSITION*
Roof	Reinforced Polyester
Lateral	Sandwich Panel 30 mm
Doors	Sandwich Panel 30 mm
Front	Sandwich Panel 30 mm

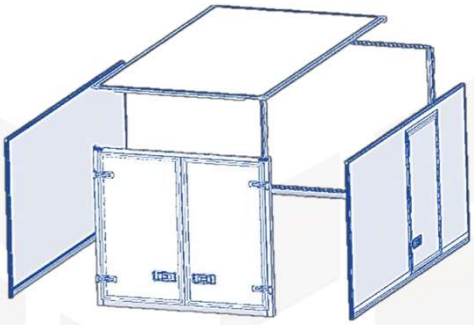

AVAILABLE MEASURES

Length	2.500 – 13.600 mm
Width	1.500 – 2.550 mm
Height	1.500 – 3.100 mm

Standard Equipment

- **Shiny finish stainless steel rare frame**
- **White lacquered profiles - RAL 9016.**
- **Stainless hardware**
- **Latches in recessed doors**
- **Reinforced polyester roofs**

Optional Equipment

- **Front and rare marker lamps**
- **Galvanized baseboard (Different heights)**
- **Aluminum baseboard (Different heights)**
- **Tie bands**
- **Slanted *Box over cabin* (Fix / Folding)**
- **Straight *Box over cabin* (Fix / Folding)**
- **Lateral doors**
- **Rear frames (different settings available)**
- **Ceiling lights**
- **More options: Contact our technical support**

Technical Support

We count with an extense commercial network at your service in order to supply you with immediate advice, both in settings, as well as in assembly.

Quality control

Our kits have been designed and manufactured according to usual quality standards at *Tecnove Fiberglass*, leader in sandwich panels sector.

Terms and shipment conditions

Thanks to our infrastructure, we find in a position to offer a short manufacturing and delivery time, giving place, by doing that, to a strong and continue supply chain.

Calle de los Caleros, 3 13640 Herencia (Ciudad Real)
comercial@t-fiberglass.com | www.t-fiberglass.com